ORTAL
YOUR LIFE. YOUR FIRE

200 Tunnel Double Glass

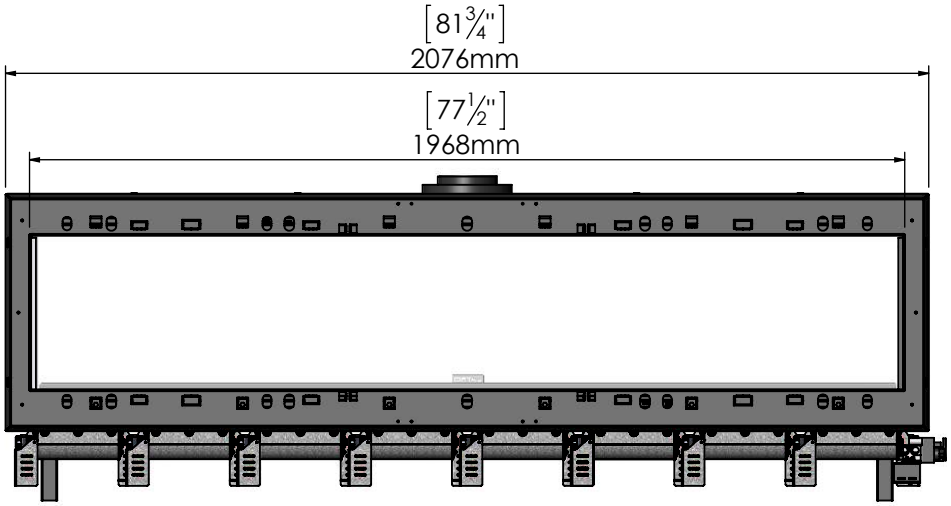

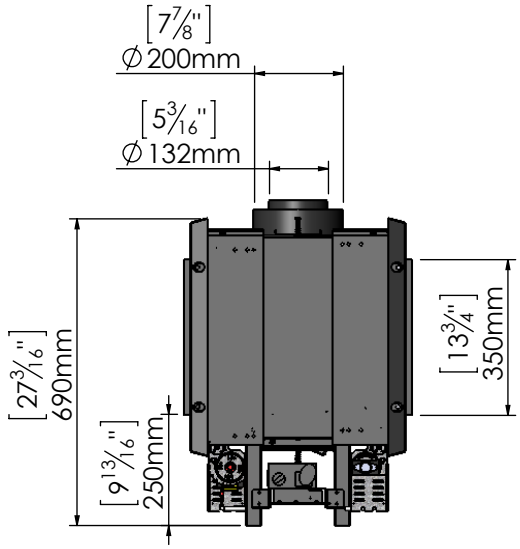

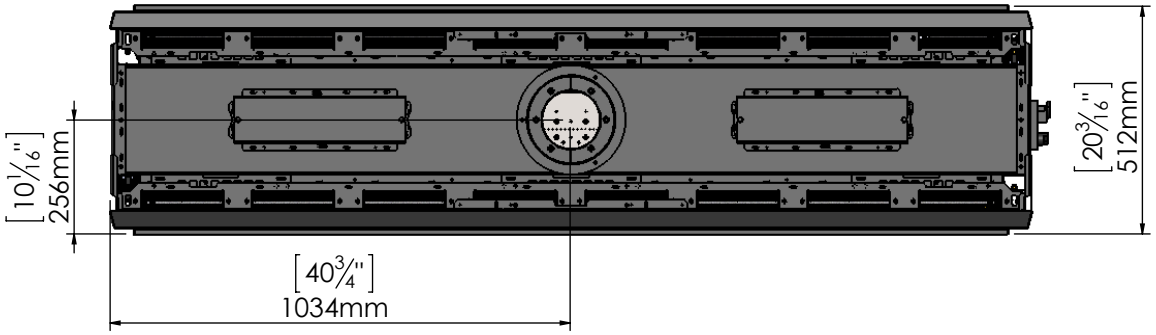

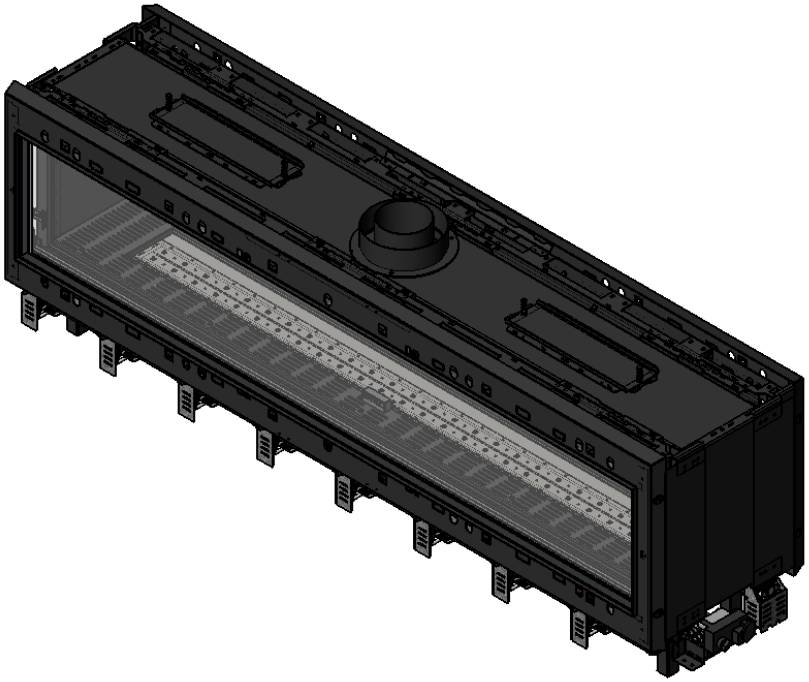

8/9/2017