ORTAL
YOUR LIFE. YOUR FIRE

150 Front Stand Alone

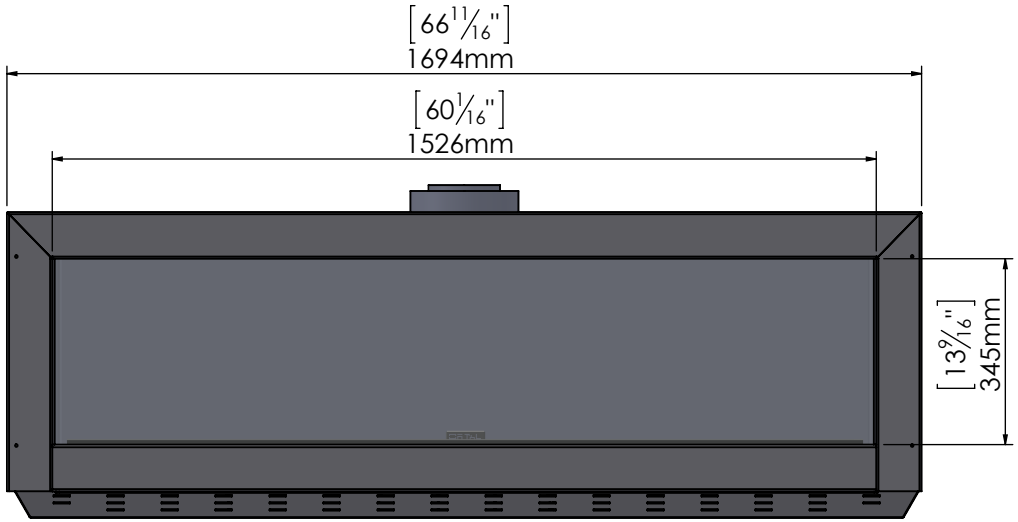

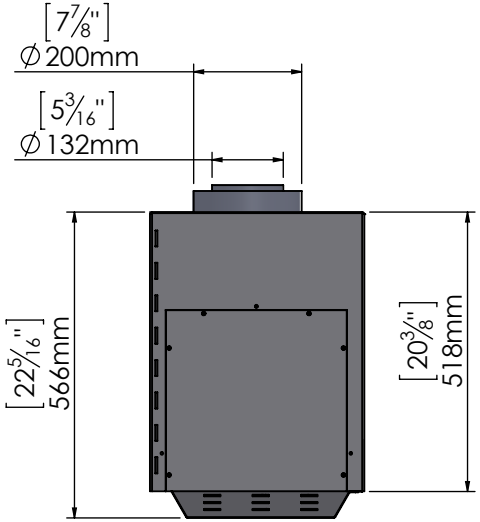

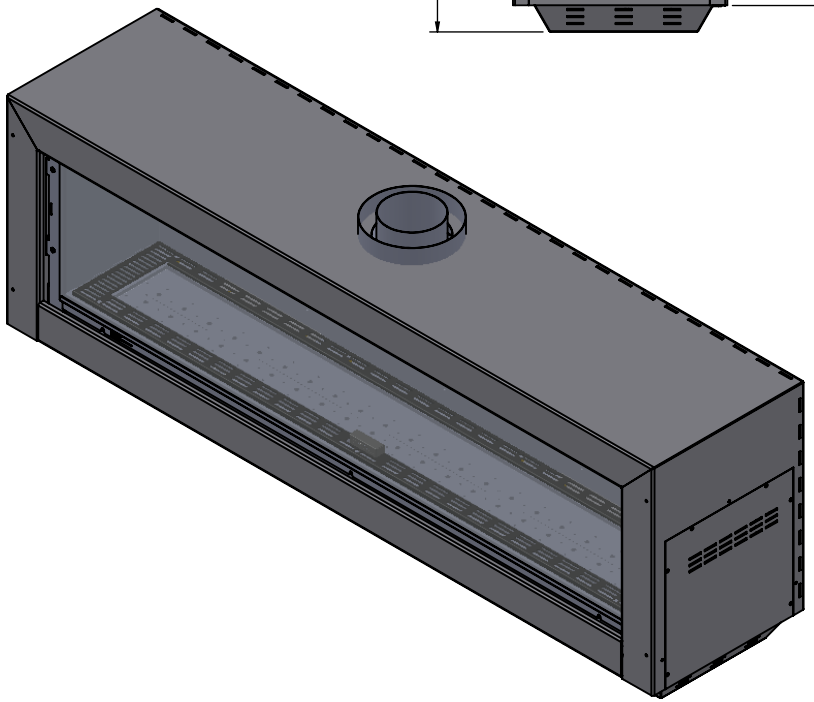

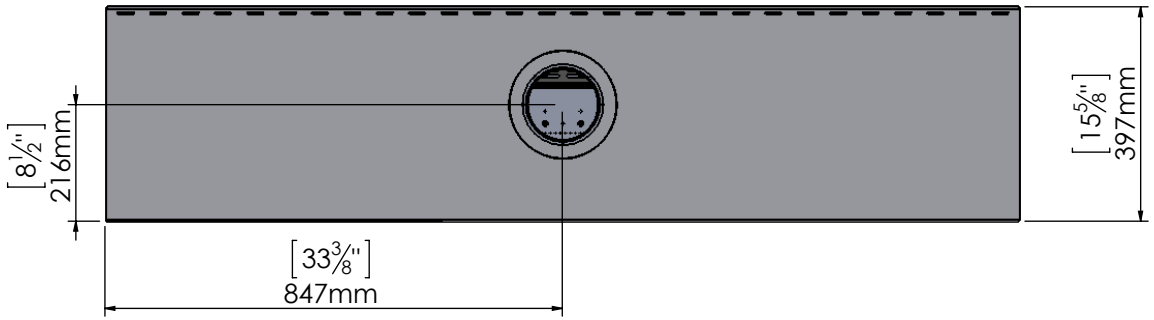

8/8/2017